INSTRUCTION MANUAL – REUSABLE SKIN STAPLER

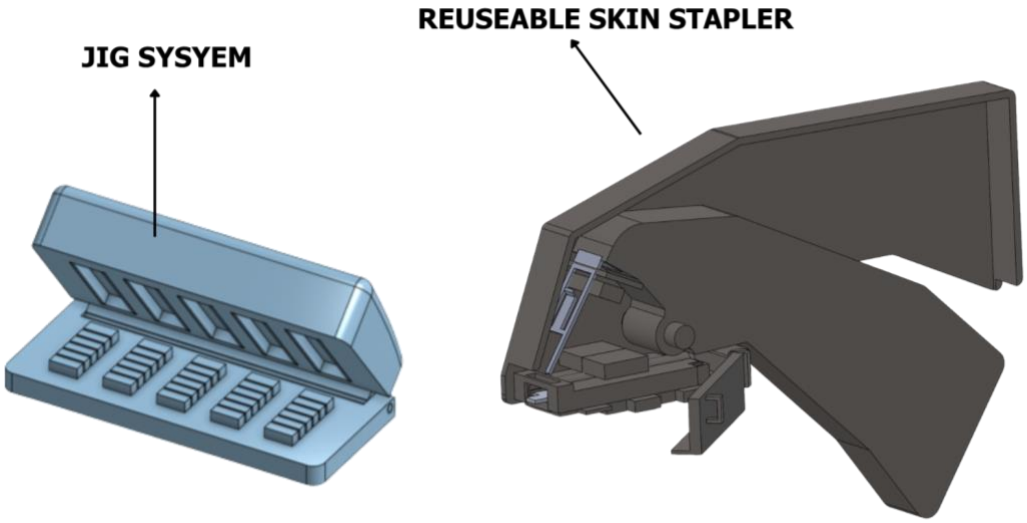

Table of Contents

INTRODUCTION 3

SAFETY INFORMATION 3
DEVICE DESCRIPTION 5

DEVICE OPERATION 6

JIG OPERATION 7

CLEANING AND STERILIZATION 8

MAINTENANCE AND TROUBLESHOOTING 9

USABILITY GUIDELINES 11

STORAGE AND HANDLING.....16

TECHNICAL SPECIFICATIONS 17

DISPOSAL CONDITIONS.....17

REGULATORY AND STANDARDS COMPLIANCE.....18

APPENDIX 18

Introduction

1. Purpose of the Device
    1.1. The reusable surgical skin stapler will be designed to provide a fast, reliable, and cost-effective method for closing skin wounds as an alternative to suturing during operations, particularly in low- and middle-income clinical settings where access to disposal devices does not exist.
2. Intended Use and Indications
    2.1. The intended use will be to close external skin wounds by deploying sterile metal staples that bring the wound edges together to promote proper healing.
3. Target Users
    3.1. The device is intended for us by trained healthcare professionals, including surgeons, physicians, and clinical staff experienced in wound closure techniques. It may also be used by individuals who have received appropriate training and instructions in the safe and proper operation of the device.
4. Device Overview
    4.1. The reusable surgical skin stapler is a handheld mechanical device designed to close external skin wounds through the application of metal staples. The device operates by manual actuation, where compressing the handle advances a staple from the cartridge and forms it against the anvil to approximate wound edges.
    4.2. The device consists of several components: a handle, trigger mechanism, staple cartridge with lid, staple pusher, anvil, and locking mechanism. These components work together to enable controlled staple deployment and consistent wound closure.

Safety Information

5. General Safety Precautions
    5.1. General safety precautions should be taken when handling the device, including proper personal protective equipment and adequate eye protection. The device should only be handled after all proper training has been completed to minimize risk and possible harm to the user and patient.
6. Warnings
    6.1. **Do not use if the device has not been properly sterilized.** Use of a non-sterile stapler may result in serious infection or cross-contamination between patients.

6.2. **Do not use the stapler if any components are damaged, deformed, or show signs of wear.** Device failure during use may lead to improper wound closure or patient injury.

6.3. **Do not reuse staples.** Only sterile, single-use staples should be loaded into the device to ensure proper wound closure and prevent infection.

6.4. **Do not use excessive force during operation.** Applying excessive force may damage the device or result in improper staple formation.

6.5. **Ensure proper alignment of the wound's edges before deploying staples.** Misalignment may result in poor healing, tissue damage, or increased scarring.

6.6. **Do not use the device on internal tissues or for applications other than external skin closure.** Improper use may result in serious injury.

6.7. Do not use the stapler on patients with known metal allergies (e.g. nickel sensitivity) unless compatibility is confirmed.

6.8. **Ensure the device has cooled sufficiently after autoclaving before handling or using.** Failure to do so may result in user burns.

6.9. **Do not use the device if sterilization cycles exceed the validated number of uses.** Overuse may compromise structural integrity and performance.

6.10. **Only trained users/healthcare professionals should operate this device.** Improper use may lead to ineffective wound closure or patient harm.

6.11. **Improper cleaning or sterilization between uses may result in biofilm formation and increased infection risk.**

6.12. **Repeated sterilization may degrade material properties over time.** Inspect the device regularly for changes in dimensions, stiffness, or function.

7. <u>Cautions</u>

7.1. Do not drop or mishandle the device, as this may affect alignment and staple formation.

7.2. Ensure the device is fully dry before use, as residual moisture may interfere with performance.

7.3. Do not overfill or improperly load the staple cartridge, as this may cause jamming.

7.4. Avoid contact with harsh chemicals outside of recommended cleaning agents, as this may degrade device materials.

7.5. Ensure proper positioning of the stapler prior to firing to prevent incomplete staple formation.

7.6. Do not partially actuate the handle, as incomplete firing may result in malformed staples.

7.7. Store the device in a clean, dry environment to prevent contamination or corrosion.

7.8. Inspect moving components before each use to ensure smooth operation and prevent malfunction.

7.9. Do not attempt to modify or disassemble the device beyond intended cleaning and instructed procedures, as this may affect functionality.

7.10. Allow the device to cool after sterilization before handling or use to prevent handling discomfort and ensure proper function.

8. Contraindications

8.1. Use of the device on the face, neck, areas requiring fine cosmetic results, hands, feet, joints, thin skin, jagged or uneven lacerations, infected or contaminated wounds, patients undergoing an MRI, patients with a metal allergy, or on irregular or deeper wounds should be avoided.

9. Infection Control Considerations

9.1. Users must adhere to strict sterilization, cleaning, and maintenance protocols described in this manual to reduce risk of cross=contamination and possible infection between patients.

Device Description

10. Components and Parts Identification

10.1. The designed reusable skin stapler consists of several primary components that work together to load, position, and deploy the staple. These include the handle, which allows the user to grip and actuate the device and provide the force needed for staple deployment; the staple cartridge which holds the staples prior to use with the anvil built in; the pusher mechanism which applies the force to deform the staple; the anvil which bends the staple legs inward to form the staple correctly; and the locking mechanism to secure the reloadable cartridge in place during setup and use.

11. Device Materials

11.1. The reusable skin stapler is constructed from durable 3D-printable materials selected to withstand repeated handling, cleaning, and sterilization cycles. Structural components of the device are intended to be made from sterilizable, mechanically strong materials that can resist wear, deformation, and degradation under expected operating conditions.

Material selection will also consider biocompatibility for any parts that may come into contact with the patient, as well as resistance to heat and moisture exposure during sterilization.

12. Staple Specifications
    - 12.1. Each staple is compatible with the cartridge and deployment mechanism to ensure consistent feeding, forming, and closure performance. Staples should have dimensions and material properties that allow them to be advanced smoothly through the device and bent reliably by the anvil during deployment. Only staples that meet the specified size, shape, and material requirements for the device should be used, as incompatible staples may lead to jamming, incomplete formation, or improper wound closure.
    - 12.2. Each staple is formed from 304V stainless steel wire. All staples are formed with consistent dimensions of an 11mm width and 3mm leg height. Upon deployment and implantation into skin, the width of the exposed portion of the staple is 5mm.
13. Mechanism of Action
    - 13.1. The designed reusable skin stapler operates by mechanically deploying a metal staple across approximated wound edges. When the user actuates the handle, the internal pusher advances along the internal guides towards the cartridge to advance a staple toward the wound. As the staple moves forward, it penetrates the skin on both sides of the wound and contacts the anvil, which bends the staple legs inward to secure the tissue edges together. This process creates a closed staple formation that holds the wound margins in a position to support healing. Proper alignment of the device and full actuation are necessary to achieve consistent staple formation and effective wound closure.

Device Operation

14. Pre-Use Inspection
    - 14.1. Verify that sterilized device is retrieved from the proper storage conditions
    - 14.2. Verify that device has been sterilized within 56 hours of use
    - 14.3. Detailed protocol to be determined
15. Loading the Staple Cartridge

15.1. Place formed staples onto cartridge platform, making sure that all staples are placed perpendicular relative to the bottom of the cartridge. Ensure that only one staple is positioned within each groove and that each staple is adjacent to any neighboring staples without any overlap.Ensure that only one staple is positioned within each cartridge groove and that each staple is adjacent to any neighboring staples without any overlap.

15.2. Once all staples are secured onto the cartridge, disengage the locking mechanism on the side of the stapler, open the door and slide the cartridge into the slot. Make sure to keep the loaded cartridge level with the stapler base to prevent jamming. Once the cartridge is flush with the stapler, close the door and re-engage the locking mechanism.

16. Positioning the Device

16.1. Position the head of the stapler perpendicular to the wound's approximated edges. Adjust the stapler as necessary to ensure that the stapler head is flush with the skin prior to deploying staples.

17. Staple Deployment Procedure

17.1. Use a squeezing motion to displace the handle upwards into the shell to trigger staple deployment. Fully actuate the mechanism to ensure proper implantation in the skin.

18. Post-Deployment Handling

18.1. Once staple has been successfully ejected from the device, allow the handle to return to its initial state

19. Removing the Device Safely

19.1. Move the stapler away from the wound once the stapler detaches from the current staple and continue the process as needed until the wound is securely closed.

Jig Operation

20. Pre-Use Inspection
21. Fabricating Staples Using Jig System

21.1. Place wire spool adjacent to jig and pull across width of base

21.2. Cut wire at the appropriate length, ensuring wire is securely held by grooves

21.3. Repeat for remaining jig rows

21.4. Pull down press to close jig

21.5. Apply pressure with both hands until press meets base

21.6. Lift press

22. Cutting out Staples
23. Packing Staples for Cartridge

Cleaning and Sterilization

24. Cleaning Procedure (Pre-Sterilization)
    - 24.1. Prior to sterilization, remove the cartridge from the stapler and remove any remaining staples.
        - 24.1.1. Unused staples can be set aside for future use following re-sterilization both prior to being placed in the new cartridge, and alongside the cartridge after loading.
    - 24.2. Thoroughly inspect each component of the stapler, noting any visible debris and/or biological materials present, including but not limited to blood and epidermal tissue.
    - 24.3. Clear any visible debris with a soft bristled brush, following [pre-sterilization protocol]a soft bristled brush for medical device pre-processing
25. Recommended Sterilization Methods
    - 25.1. Steam sterilization is recommended for all device components, including accessory parts such as composing the jig system.
    - 25.2. All parts should be sterilized at a temperature of 121°C (or 250°F) for 30 minutes
26. Drying and Storage After Sterilization
    - 26.1. Upon removal of parts from the autoclave, ensure there are no remaining water residues on the surface or within components. If moisture is detected on a given part, it is considered to be contaminated and must be run through the sterilization cycle again.
    - 26.2. Store all sterilized parts in a dry, well-ventilated, and enclosed area. The storage area should not have a temperature exceeding 75°F and a humidity level exceeding 70%. This area should have limited access and controlled temperature and humidity. However, it is recommended that sterilization of the stapler takes place immediately prior to use to ensure the sterility of the device.
27. Maximum Reuse Cycles
    - 27.1. To be determined with continued experimental validation testing
28. Inspection After Sterilization
    - 28.1. Ensure there is no visible debris on any sterilized parts.
    - 28.2. Ensure all parts are dry and do not otherwise indicate the presence of residual water from the autoclaving process.
    - 28.3. Ensure all sterilized parts are stored as recommended to avoid contamination

28.4. Maintain documentation of the sterilization process, including autoclave settings, the date and time a part is sterilized, and environmental factors such as temperature and humidity in the work area

Maintenance and Troubleshooting

29. Routine Maintenance

29.1. To ensure optimal performance and increased lifecycle of the device, the following maintenance procedures should be performed after each use:

29.1.1. **Cleaning**: Thoroughly clean all external and internal components using an approved medical-grade detergent to remove biological debris.

29.1.2. **Sterilization**: Sterilize the device using a validated method, in this case autoclave cycle, according to institutional protocols. Ensure all components are fully dry before reuse.

29.1.3. **Inspection**:

- Check for visible wear, corrosion, or damage to metal components
- Inspect the staple track and cartridge interface for debris or obstruction
- Ensure smooth movement of the trigger and internal mechanisms

30. Commons Issues and Solutions

Issue	**Possible Cause**	**Solution**
Staple does not deploy	Misaligned cartridge or obstruction	Remove cartridge, clean track, and reinsert properly
Incomplete staple formation	Worn anvil or insufficient force	Inspect anvil for wear; remove device from service if deformation persists
Trigger is difficult to press	Debris buildup	Clean device thoroughly
Cartridge does not lock into place	Damaged locking mechanism or tolerance issues	Inspect locking feature, replace cartridge or device if needed
Staples jam during deployment	Improper loading	Remove cartridge, clear obstruction, reload properly

31. Device Malfunction Indicators

31.1. Immediately discontinue use of any of the following are observed:

32. When to remove Device from Service

32.1. The device must be removed from service under the following conditions:

32.1.1. After exceeding the validated number of sterilization and use cycles, >120 uses

32.1.2. If any structural damage or deformation is observed

32.1.3. If repeated malfunctions occur despite troubleshooting

32.1.4. If staple formation no longer meets performance criteria

32.1.5. If sterilization integrity cannot be assured

32.1.6. If any component cannot be properly cleaned or maintained

Device removed from service should be clearly labeled and either repaired or disposed of according to institutional and regulatory guidelines.

Usability Guidelines

33. Training Requirements
    - 33.1. The device is intended for use by trained personnel, including but not limited to trained medical personnel (i.e. surgeons, physicians, physician assistants, and nurses).
    - 33.2. Users should be familiar with basic wound closure techniques and sterile field practices
    - 33.3. Initial training should require less than 10 minutes, including:
        - 33.3.1. Identification of device components
        - 33.3.2. Proper staple loading
        - 33.3.3. Proper cartridge loading
        - 33.3.4. Stapling techniques and trigger actuation
        - 33.3.5. Post-use cleaning and sterilization overview
    - 33.4. Users should review the instruction manual prior to first use.
34. Expected Setup and Operation Time
    - 34.1. Set up time < 10 minutes (includes device inspection, cartridge loading, and positioning)
    - 34.2. Operation time is comparable to standard disposable staplers
    - 34.3. Total workflow < 20 minutes (including setup, use, and post-use handling)
35. How to Set Up Device
    - 35.1. Inspect the device for damage, wear, or contamination.
    - 35.2. Ensure the device has been properly sterilized prior to use.
    - 35.3. Open the device by releasing the hinged locking mechanism.
    - 35.4. Insert the loaded staple cartridge into the designated slot until it is fully loaded into the shell.
    - 35.5. Close the device and secure the locking feature to ensure proper alignment.
    - 35.6. Verify smooth movement of the trigger mechanism before contacting the patient.

Set-Up

1. Place pusher inside shell in-between guide

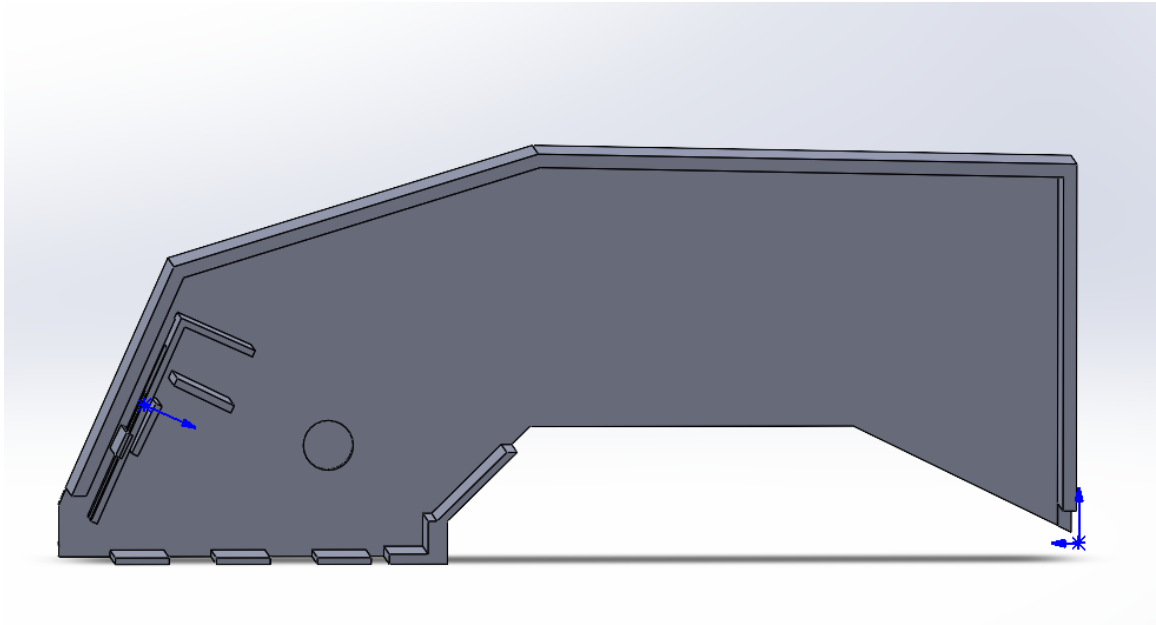

2. Click handle into place by lining up the circles on the handle to the cut circles inside the shell

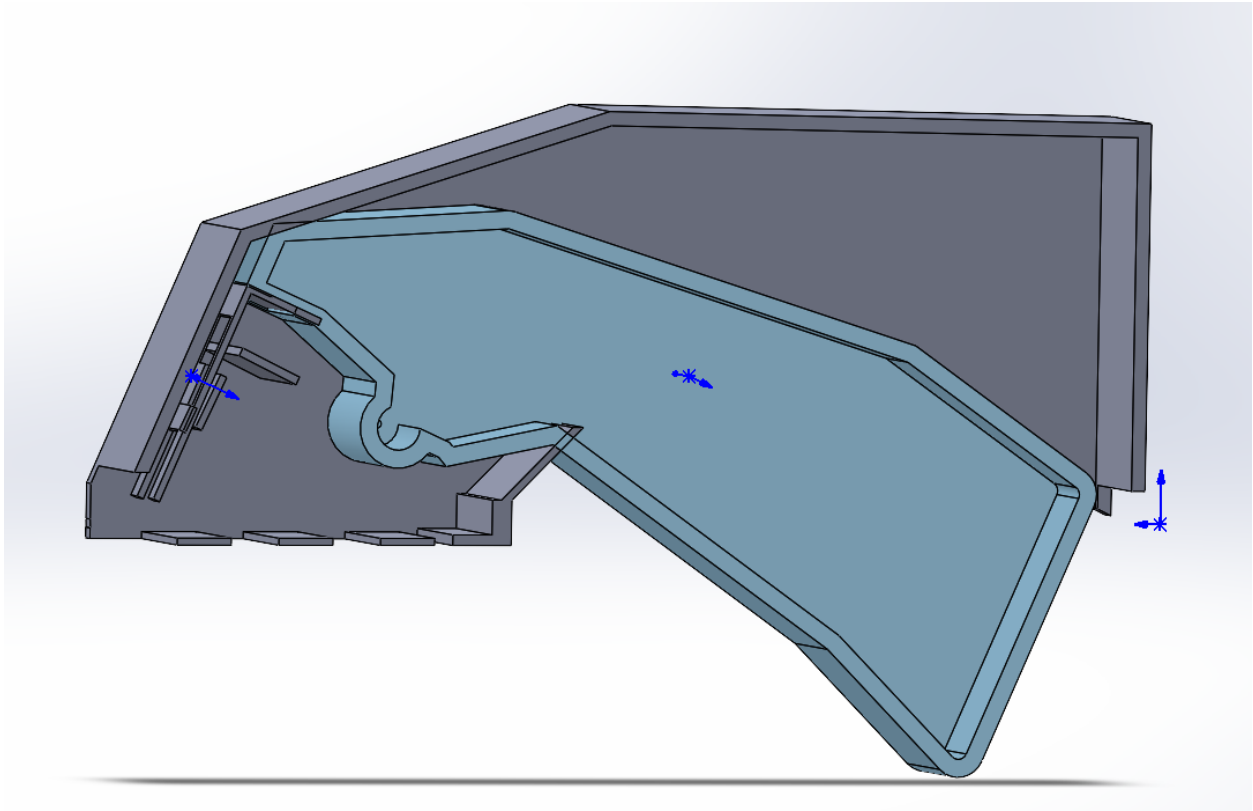

3. Attach door for cartridge to the shell by clicking into the hinge on the open side of the shell

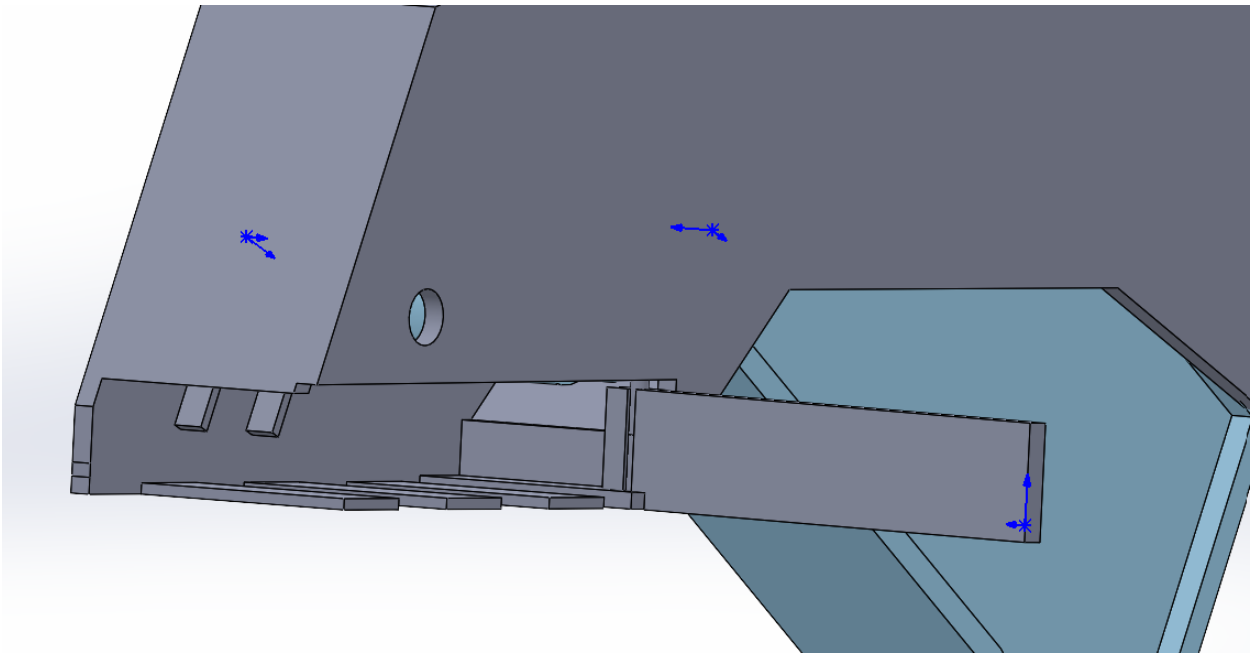

4. Slide in assembled and loaded cartridge by sliding onto the corresponding rails in the shell

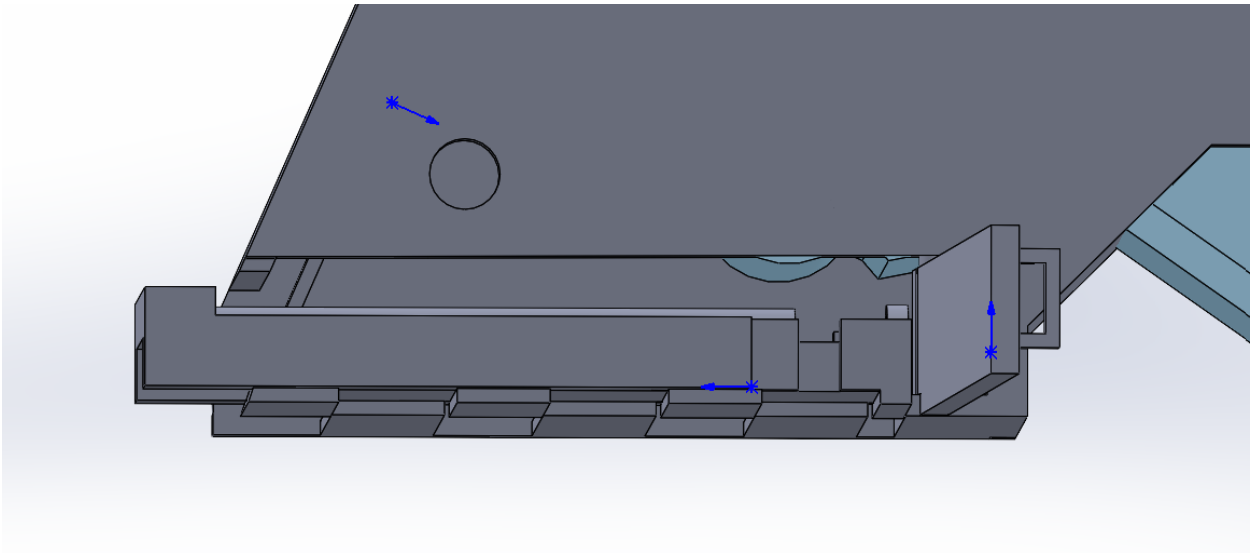

5. Ensure cartridge is fully seated on the rails and shut door to hold in place

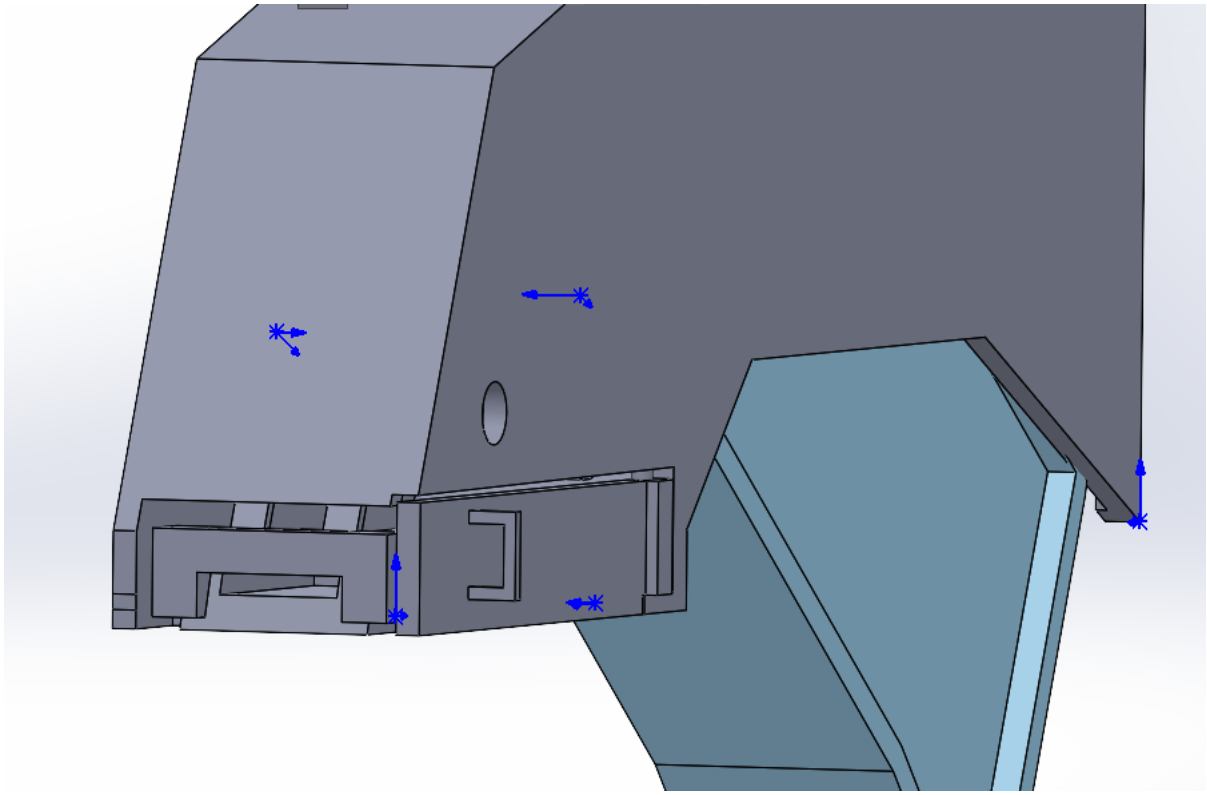

6. Swing down door and lock by ensuring it slides into handle on the door

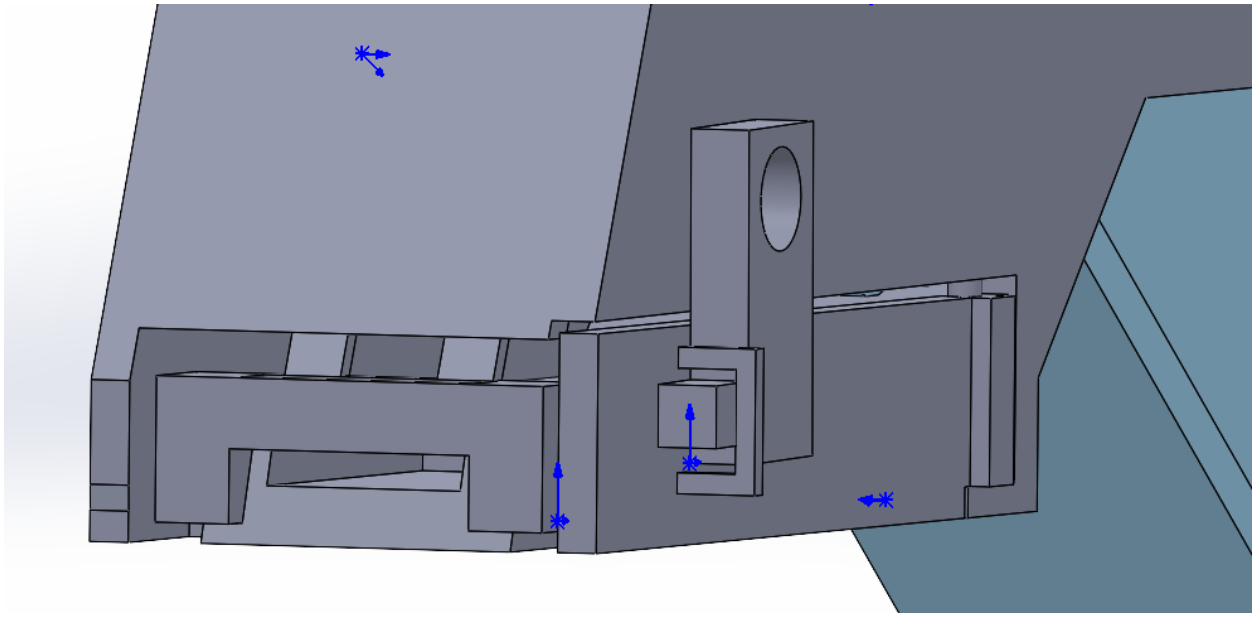

To Set Up Cartridge

1. Load staples onto cartridge and place slider behind them

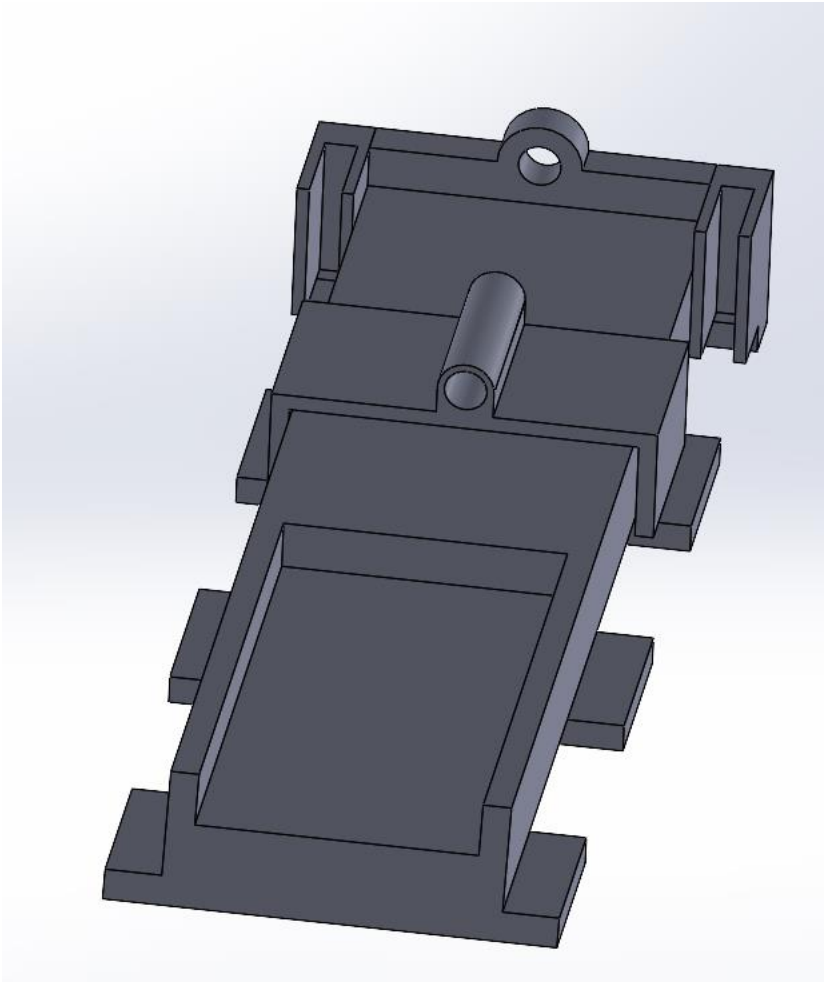

2. Slide top over staples and cartridge bottom to close the cartridge

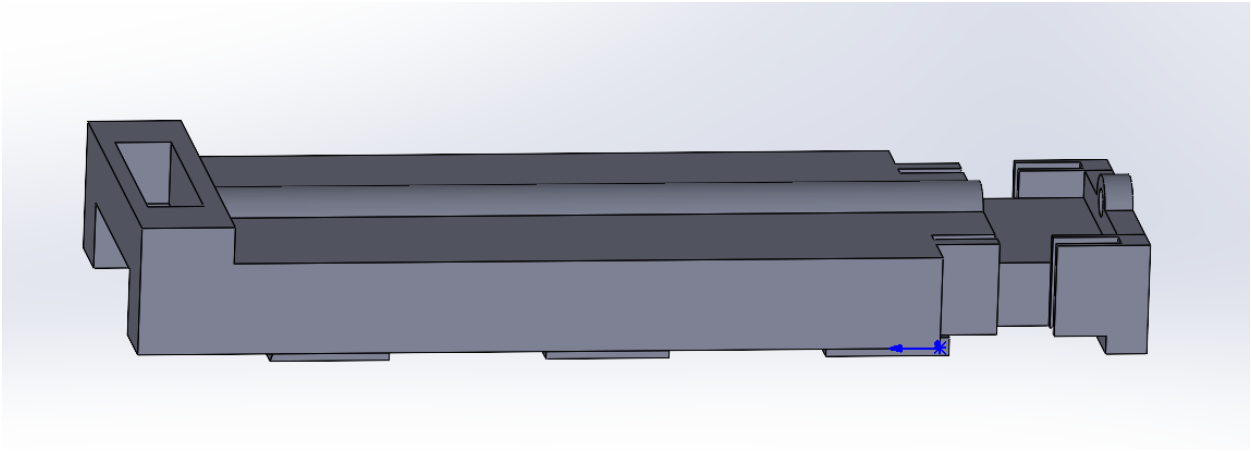

3. It is now ready to slide into the shell

36. <u>Best Practices for Efficient Workflow</u>

36.1. Prepare all material (device, cartridge, sterilization supplies) before beginning the procedure.

36.2. Align wound edges carefully prior to stapling to ensure accurate staple placement.
36.3. Apply consistent pressure and full trigger actuation for proper staple formation.
36.4. Maintain a steady pace to minimize procedure time and patient discomfort.
36.5. Perform a quick function check between staple deployments if needed.

37. Common Use Errors and Prevention

Common Error	Cause	Prevention
Incomplete staple formation	Partial trigger actuation	Ensure full compression of the trigger
Cartridge misalignment	Improper loading	Confirm cartridge clicks securely into place
Device jamming	Debris or worn components	Clean device thoroughly and inspect before use
Poor wound closure	Misaligned tissue edges	Properly align tissue prior to firing
Excessive force required	Mechanical wear or obstruction	Inspect and remove device from service if resistance is abnormal

Storage and Handling

38. Storage Conditions
    38.1. Store the device in a clean, dry, and dust-free environment
    38.2. Maintain temperature between 15°C and 30°C
    38.3. Avoid exposure to direct sunlight, high humidity, or corrosive environments
    38.4. Store in a sterile barrier system or protective case after sterilization
    38.5. Ensure the device is fully dry before storage to prevent corrosion or microbial growth
39. Transport Conditions
    39.1. Transport the device in a protective, impact-resistive container
    39.2. Maintain temperature between 0°C and 50°C during transport
    39.3. Protect from moisture, excessive vibration, and mechanical shock

39.4. Ensure the device is secured to prevent movement or damage during transit

39.5. If transported post-sterilization, maintain sterile packaging integrity

40. Shelf Life

40.1. The reusable skin stapler has a functional lifespan dependent on the number of use and sterilization cycles

40.2. The device is designed to withstand a minimum of 120 sterilization/use cycles without significant degradation

40.3. Inspect the device before each use for signs of wear, corrosion, misalignment or mechanical failure

40.4. Remove the device from service if:

40.4.1. Staple formation becomes inconsistent

40.4.2. Mechanical components show visible damage or excessive wear

40.4.3. The device fails functional testing after sterilization

Technical Specifications

41. Device Dimensions and Weight

41.1. WILL ADD AFTER FINAL DEVICE IS PRINTED

42. Materials and Biocompatibility (ISO 10993)

43. Mechanical Performance Characteristics

44. Environmental Operating Conditions

Local Manufacturing

45. Equipment

45.1.

46. Shell + Handle

47. Cartridge

48. Staple Deformer and Anvil

Disposal Conditions

49. End-of-Life Disposal

49.1. The device must be cleaned and decontaminated prior to disposal to reduce biohazard risk

49.2. Dispose of the device in accordance with local, regional, and national regulations for medical devices

49.3. If contaminated with biological material, treat as biohazardous waste and follow appropriate disposal procedures

49.4. Do not dispose of the device in general household waste unless it has been properly decontaminated and regulations permit

49.5. The device should be removed from service when:

49.5.1. It no longer meets mechanical performance requirements

49.5.2. There is visible damage, corrosion, or deformation

49.5.3. It fails functional or safety inspections

49.6. At end-of-life:

49.6.1. Disassemble the device where possible to separate materials

49.6.2. Dispose of metal components through recycling streams where available

49.6.3. Dispose of polymer components according to local waste management guidelines

49.6.4. Ensure all components are non-contaminated or properly treated prior to disposal

50. Environmental Considerations

50.1. The reusable design reduces signle-use medical waste, supporting sustainability in low-resource settings

50.2. Materials are selected for durability, long service life, resistance to repeated sterilization cycles

50.3. Whenever possible recycle metallic components to reduce environmental impact, minimize unnecessary disposal by following proper maintenance and inspection protocols

50.4. Avoid improper disposal, which could contribute to environmental contamination and/or increased healthcare waste burden

Regulatory and Standards Compliance

51. Applicable Standards
52. Labeling and Symbols Explanation

Appendix

53. Illustrated Diagrams of Device
54. Step-by-Step Visual Workflow
55. Glossary of Terms
56. Contact Information/Manufacturer Details

[ADD IN SECTION ABOUT 3D PRINTING SETTINGS]